GL15N10A4

GL Silicon N-Channel Power MOSFET

General Description

The GL15N10A4 uses advanced trench technology and design to provide excellent RDS(ON) with low gate charge. It can be used in a wide variety of applications. The package form is TO-252, which accords with the RoHS standard.

V_{DSS}	100	V
I_D	15	A
P_D	50	W
$R_{DS(ON)max}$	90	mΩ

TO-252

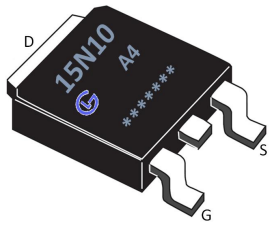

Features

- Fast Switching
- Low Gate Charge and Rdson
- Low Reverse transfer capacitances
- 100% Single Pulse avalanche energy Test

Inner Equivalent Principium Chart

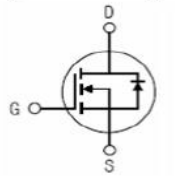

Applications

- Power switching application
- Hard switched and high frequency circuits
- Uninterruptible power supply

Absolute (Tc=25℃ unless otherwise specified)

Symbol	Parameter	Rating	Units
V_{DSS}	Drain-to-Source Voltage	100	V
I_D	Continuous Drain Current	15	A
	Continuous Drain Current T_C = 100 °C	10.5	A
I_{DM}	Pulsed Drain Current	60	A
V_{GS}	Gate-to-Source Voltage	±20	V
E_{AS} [a2]	Single Pulse Avalanche Energy	200	mJ
E_{AR} [a1]	Avalanche Energy ,Repetitive	30	mJ
I_{AR} [a1]	Avalanche Current	7	A
dv/dt [a3]	Peak Diode Recovery dv/dt	5.0	V/ns
P_D	Power Dissipation	50	W
T_J, T_{stg}	Operating Junction and Storage Temperature Range	175, −55 to 175	℃
T_L	Maximum Temperature for Soldering	300	℃

Electrical Characteristics (Tc=25℃ unless otherwise specified)

OFF Characteristics						
Symbol	Parameter	Test Conditions	Rating			Units
			Min.	Typ.	Max.	
V_{DSS}	Drain to Source Breakdown Voltage	V_{GS}=0V,I_D=250μA	100	--	--	V
$\Delta BV_{DSS}/\Delta T_J$	Bvdss Temperature Coefficient	I_D=250uA,Reference25℃	--	0.1	--	V/℃
I_{DSS}	Drain to Source Leakage Current	V_{DS}=100V,V_{GS}=0V, T_a=25℃	--	--	1	μA
		V_{DS}=80V,V_{GS}= 0V,T_a=125℃	--	--	250	
$I_{GSS(F)}$	Gate to Source Forward Leakage	V_{GS}=+20V	--	--	1	μA
$I_{GSS(R)}$	Gate to Source Reverse Leakage	V_{GS}=-20V	--	--	-1	μA

ON Characteristics						
Symbol	Parameter	Test Conditions	Rating			Units
			Min.	Typ.	Max.	
$R_{DS(ON)}$	Drain-to-Source On-Resistance	V_{GS}=10V,I_D=8A	--	--	90	mΩ
$V_{GS(TH)}$	Gate Threshold Voltage	V_{DS}=V_{GS},I_D=250μA	1.0	1.5	2.5	V
Pulse width tp≤380μs,δ≤2%						

Dynamic Characteristics[a4]						
Symbol	Parameter	Test Conditions	Rating			Units
			Min.	Typ.	Max.	
g_{fs}	Forward Transconductance	V_{DS}=5V,I_D=10A	--	10	--	S
C_{iss}	Input Capacitance	V_{GS}=0V,V_{DS}=50V f=1.0MHz	--	830	--	pF
C_{oss}	Output Capacitance		--	44.2	--	
C_{rss}	Reverse Transfer Capacitance		--	30.1	--	

Resistive Switching Characteristics						
Symbol	Parameter	Test Conditions	Rating			Units
			Min.	Typ.	Max.	
$t_{d(ON)}$	Turn-on Delay Time	I_D=10A,V_{DD}=50V V_{GS}=10V,R_G=3.0Ω	--	18	--	ns
t_r	Rise Time		--	6.5	--	
$t_{d(OFF)}$	Turn-Off Delay Time		--	35	--	
t_f	Fall Time		--	7	--	
Q_g	Total Gate Charge	I_D=10A,V_{DD}=50V V_{GS}=10V	--	50	--	nC
Q_{gs}	Gate to Source Charge		--	8	--	
Q_{gd}	Gate to Drain ("Miller")Charge		--	16	--	

Source-Drain Diode Characteristics						
Symbol	Parameter	Test Conditions	Rating			Units
			Min.	Typ.	Max.	
I_S	Continuous Source Current (Body Diode)		--	--	15	A
I_{SM}	Maximum Pulsed Current (Body Diode)		--	--	60	A
V_{SD}	Diode Forward Voltage	I_S=15A,V_{GS}=0V	--	--	1.5	V
t_{rr}	Reverse Recovery Time	I_S=15A,T_j=25°C	--	20	--	ns
Q_{rr}	Reverse Recovery Charge	dI_F/dt=100A/us,V_{GS}=0V	--	70	--	nC
Pulse width tp≤380μs,δ≤2%						

Thermal Characteristics

Symbol	Parameter	Typ.	Units
$R_{\theta JA}$	Junction-to-Ambient	1.36	℃/W

[a1]: Repetitive rating; pulse width limited by maximum junction temperature
[a2]: EAS condition : Tj=25℃,VDD=40V,VG=10V,L=0.5mH,Rg=25Ω
[a3]: I_{SD} =15A,di/dt ≤100A/us,V_{DD}≤BV_{DS}, Start T_J=25℃

Test Circuits and Waveforms

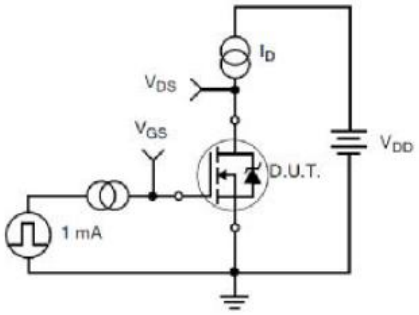

Figure 17. Gate Charge Test Circuit

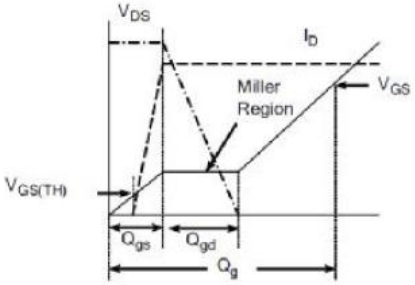

Figure 18. Gate Charge Waveform

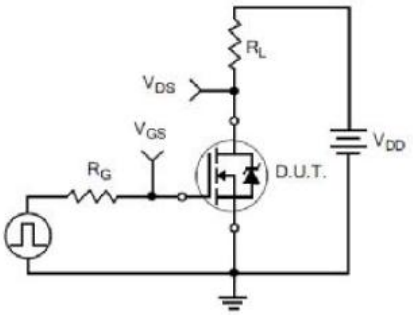

Figure 19. Resistive Switching Test Circuit

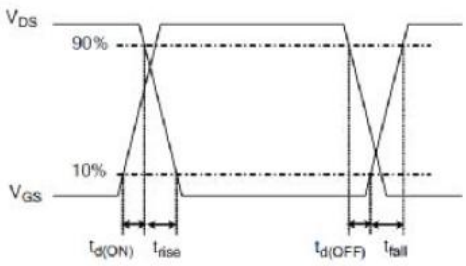

Figure 20. Resistive Switching Waveforms

Characteristics Curves

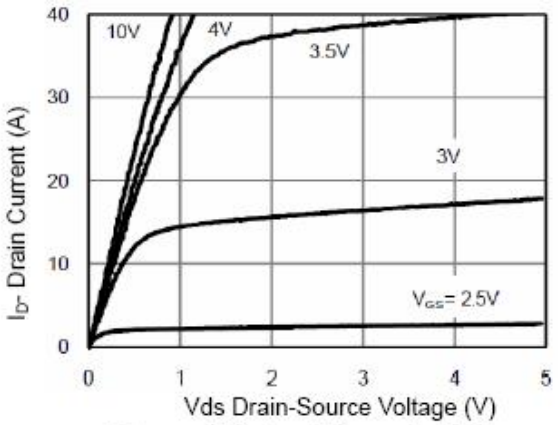

Figure 1 Output Characteristics

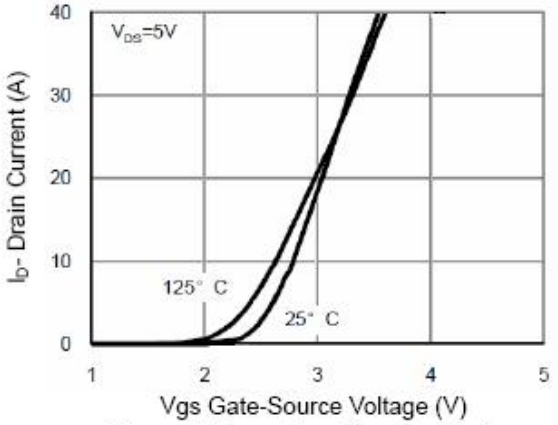

Figure 2 Transfer Characteristics

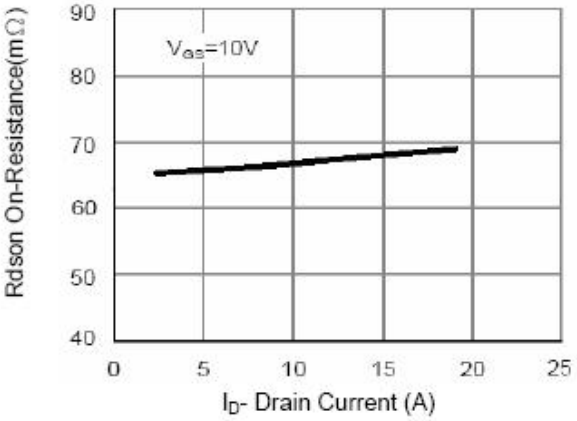

Figure 3 Rdson- Drain Current

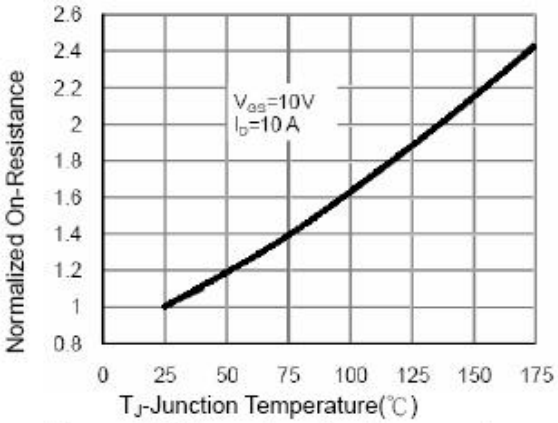

Figure 4 Rdson-JunctionTemperature

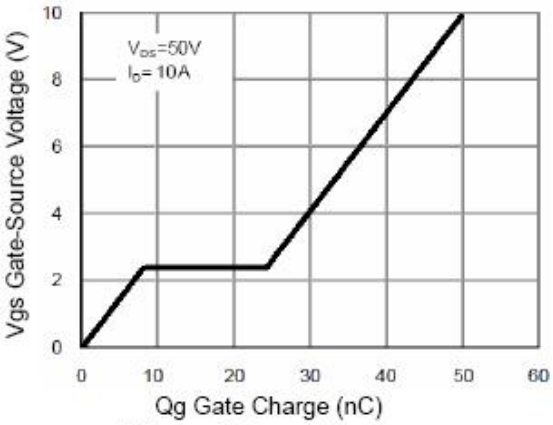

Figure 5 Gate Charge

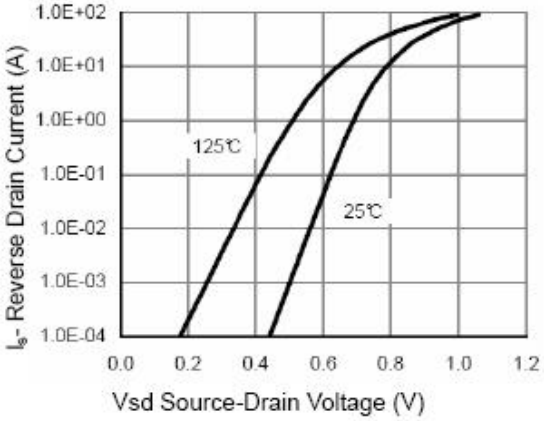

Figure 6 Source- Drain Diode Forward

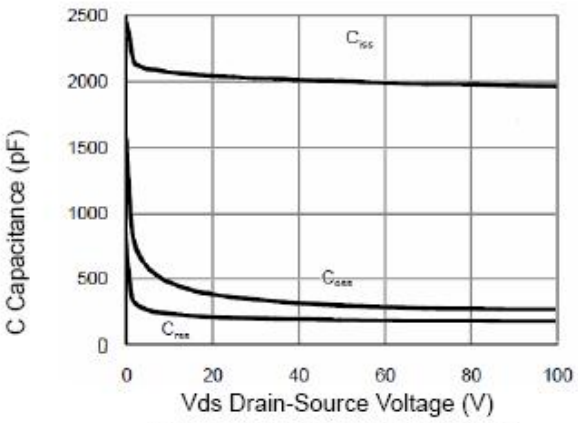

Figure 7 Capacitance vs Vds

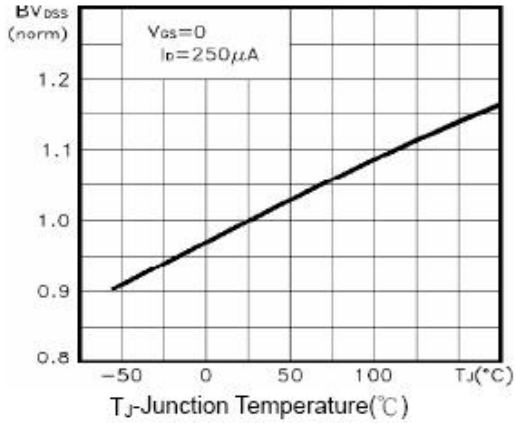

Figure 9 BV_{DSS} vs Junction Temperature

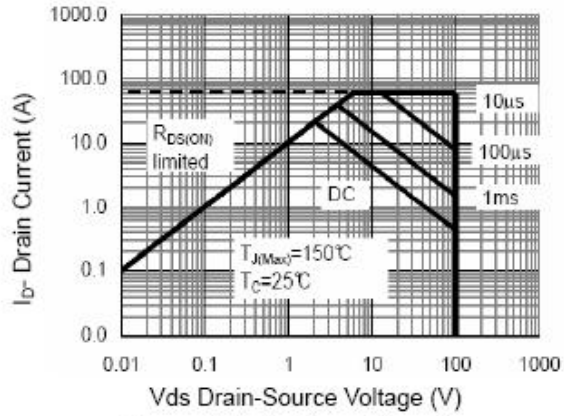

Figure 8 Safe Operation Area

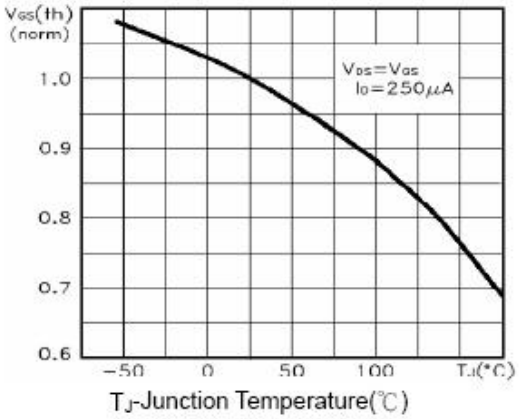

Figure 10 $V_{GS(th)}$ vs Junction Temperature

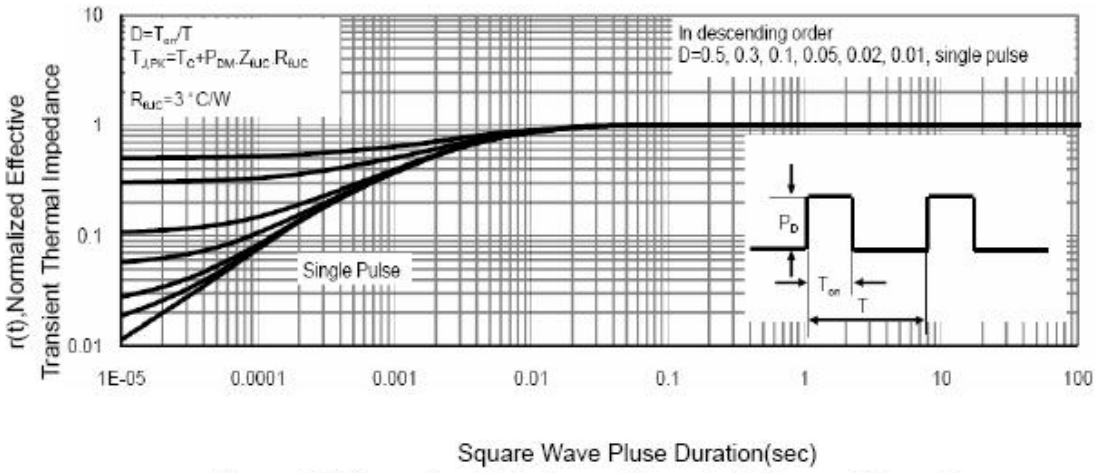

Figure 11 Normalized Maximum Transient Thermal Impedance